Alternative Fuel (101)

Alternative Fueled Vehicles Program

37 Corning Tower, ESP
Albany, NY 12242

(518) 473-6594

Biodiesel is an alternative fuel formulated exclusively for diesel engines; it's made from vegetable oil or animal fats.

Biodiesel can be mixed with petroleum diesel in any percentage, from 1 to 99, which is represented by a number following a B. For example, B5 is 5 percent biodiesel with 95 percent petroleum, B20 is 20 percent biodiesel with 80 percent petroleum, or B100 is 100 percent biodiesel, no petroleum.

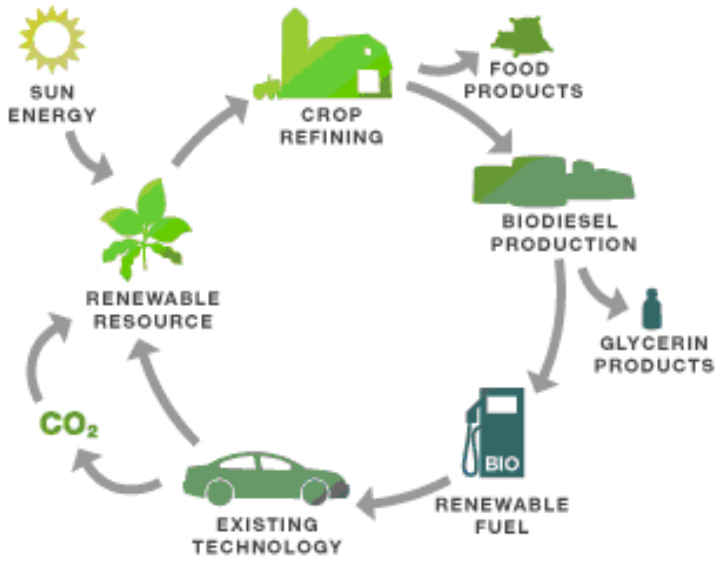

Biodiesel reduces emissions of carbon monoxide, carbon dioxide, sulfur dioxide and particulate matter and it's plant based, therefore what is used can be re-grown.

The future looks very bright for biodiesel. Not only is it easy to find and use, newer efficient diesel cars boast excellent fuel mileage. It's one of the easiest alternative fuels to implement into your life: simply find a fueling station and pump it into the tank of any diesel vehicle and drive away.

http://alternativefuels.about.com/od/biodiesel/a/whatsbiodiesel.htm

Ethanol (ethyl alcohol) is an alternative fuel fermented from corn, grains or agricultural waste or it is chemically extracted from ethylene (hydration). It is used primarily as a supplement to gasoline.

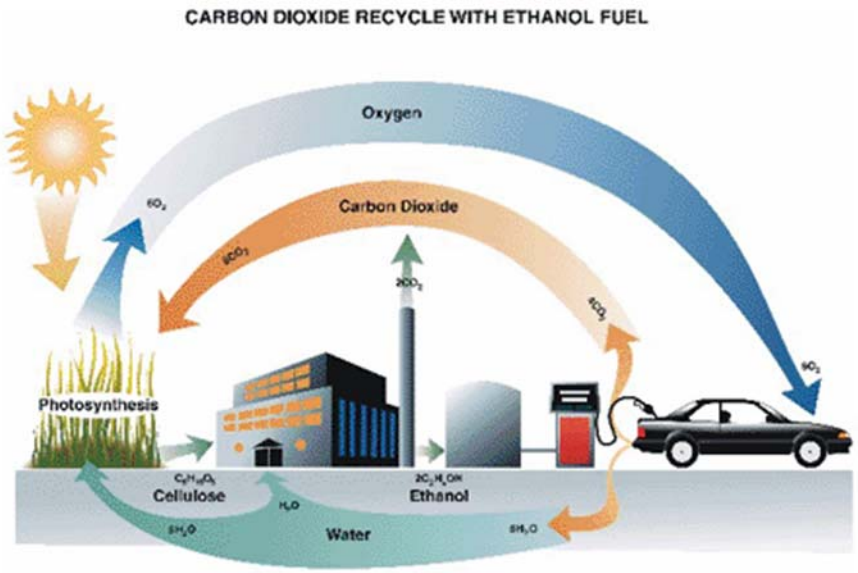

Pure ethanol is not sold as a stand-alone fuel—it is commonly mixed with gasoline in varying percentages. For example, E85 is a common mixture: 85 percent ethanol, 15 percent gasoline. Most pump gasoline contains ethanol in much lower percentages. In the United States, it is added to gasoline in varying quantities to boost the octane level and meet EPA requirements for oxygenated fuels, especially in metropolitan areas.

To burn high concentrations such as E85, vehicles have to be designed as Flex Fuel to utilize the unique combustion characteristics and tolerate the corrosiveness of the alcohol.

Flexible fuel vehicles (FFVs) are engineered to run on blends of gasoline and ethanol in any percentage up to 85 percent. E85 is 85 percent ethanol and 15 percent gasoline. It is seasonally adjusted for cold weather, and may at times, be less than 85 percent ethanol. To be considered an alternative fuel vehicle (for tax incentives), the car or truck must be able to operate on up to 85 percent ethanol.

http://alternativefuels.about.com/od/ethanol/a/whatsethanol.htm

Hybrids are vehicles that combine an internal combustion engine with an electric motor as the power source. Add a sophisticated transmission and powerful batteries and it's a recipe that makes the most of gasoline, the one fuel that's available in all fifty states--at more than 180,000 stations. Hybrids utilize the electric motor and battery storage to maximize the fuel economy from standard gasoline-burning engines. Depending upon the design and usage, hybrids can boast up to 30 percent fuel savings (sometimes more) over a comparable gasoline vehicle. And that translates into less greenhouse gases spewed into the environment also. Best of all, hybrids are designed for ease of use--just hop in and go.

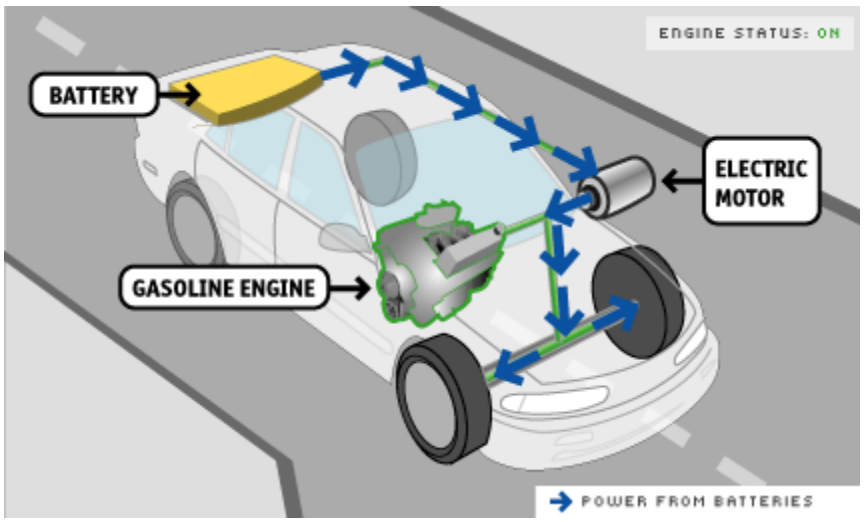

Mild – uses the electric motor and battery as an assist to the internal combustion engine.

Full – uses a two propulsion system in which it can run on just the engine, just the batteries, or in conjunction with each other.

Plug In – the internal combustion engine acts only as a back-up to the main rechargeable motor and battery system.

Power Assist Hybrid – uses the engine for primary power with a torque-boosting electric motor also connected to a largely conventional powertrain. The electric motor, mounted between the engine and transmission, is essentially a very large starter motor, which operates not only when the engine needs to be turned over, but also when the driver, "steps on the gas" and requires extra power.

http://alternativefuels.about.com/od/alternativefuels101/a/hybridfaq3.htm?once=true&

In a **SERIES HYBRID**, the electric motor is is the only means of providing power to get your wheels turning. The motor receives electric power from either the battery pack or from a generator run by a gasoline engine. A computer determines how much of the power comes from the battery or the engine/ generator set. Both the engine/generator and regenerative braking recharge the battery pack. The engine is typically smaller in a series drivetrain because it only has to meet average driving power demands; the battery pack is generally more powerful than the one in parallel hybrids (see below) in order to provide remaining peak driving power needs. This larger battery and motor, along with the generator, add to the cost, making series hybrids more expensive than parallel hybrids. The Honda civic Hybrid and Honda Insight are both examples of Series Hybrids.

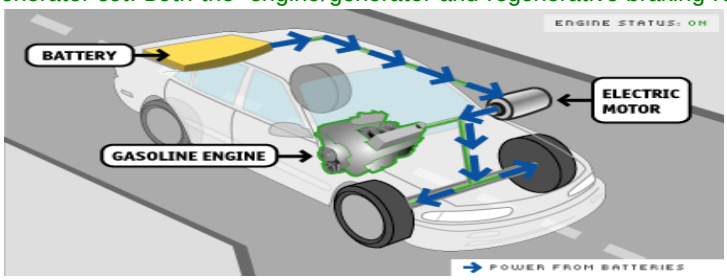

With a **PARALLEL HYBRID** electric vehicle, both the engine and the electric motor generate the power that drives the wheels. The addition of computer controls and a transmission allow these components to work together. Parallel hybrids can use a smaller battery pack and therefore rely mainly on regenerative braking to keep it recharged. However, when power demands are low, parallel hybrids also utilize the drive motor as a generator for supplemental recharging, much like an alternator in conventional cars. Since, the engine is connected directly to the wheels in this setup, it eliminates the inefficiency of converting mechanical power to electricity and back, which makes these hybrids quite efficient on the highway. Yet the same direct connection between the engine and the wheels that increases highway efficiency compared to a series hybrid does reduce, but not eliminate, the city driving efficiency benefits. The Nissan Altima Hybrid, and the Toyota Camry Hybrid are examples of parallel Hybrids.

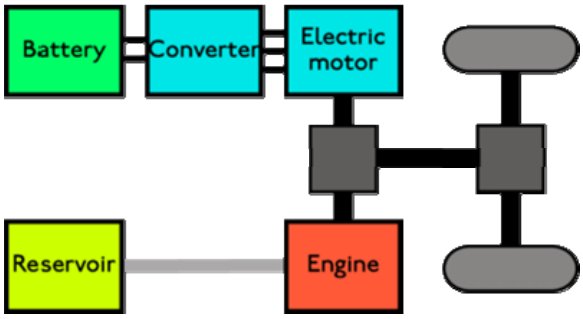

With a **TWO-MODE HYBRID**, the drivetrain merges the advantages and complications of the parallel and series drivetrains. By combining the two designs, the engine can both drive the wheels directly (as in the parallel drivetrain) and be effectively disconnected from the wheels so that only the electric motor powers the wheels (as in the series drivetrain). As a result of this dual drivetrain, the engine operates at near optimum efficiency more often. At lower speeds it operates more as a series vehicle, while at high speeds, where the series drivetrain is less efficient, the engine takes over and energy loss is minimized. This system incurs higher costs than a pure parallel hybrid since it needs a generator, a larger battery pack, and more computing power to control the dual system. However, the series/parallel drivetrain has the potential to perform better than either of the systems alone. The Toyota Prius, Chevy Tahoe Hybrid SUV and Ford Escape Hybrid are examples of Two-Mode Hybrids.

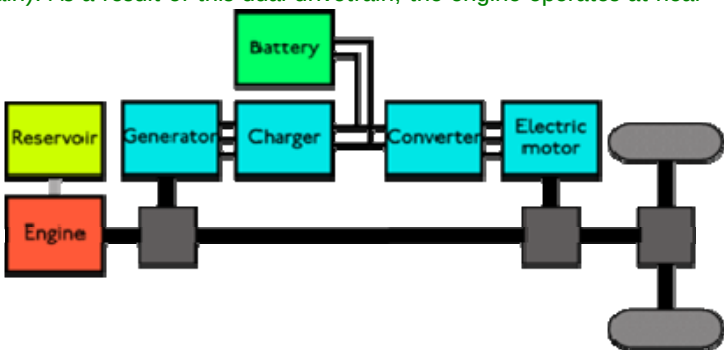

Hydrogen is a basic element. The most abundant element on earth, it's an elemental gas that is extracted from other compounds, not manufactured in the traditional sense like other fuels.

Most commercial hydrogen is refined from petroleum (natural gas), but can also be made by passing electricity through water (electrolysis). Although it is possible to burn it in an engine, sophisticated fuel management systems are required and just a few developers are devoting time in this area. Fuel cells that chemically alter hydrogen—not burn it—still tend to be the most efficient devices to create power from hydrogen.

While some manufacturers do have hydrogen powered internal combustion engine vehicles in the pipeline, most of the research and development effort is focused on perfecting hydrogen fuel cells—these will provide electrical power for electric motor vehicles.

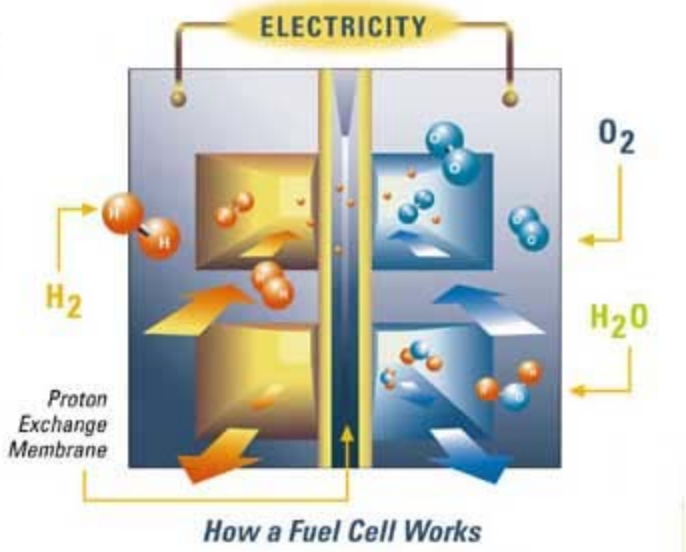

How a Fuel Cell Works

Graphic courtesy California Fuel Cell Partnership
www.cafcp.org

Fuel cells generate electricity from a catalyst-facilitated chemical reaction between hydrogen and oxygen ions in a cell. Several cells combined make up a fuel cell stack. Fuel cell systems have relatively few moving parts, and their only by products are water and heat when pure hydrogen is used as the fuel.

A fuel cell converts the chemical energy of a fuel directly into electricity without any intermediate thermal or mechanical processes. The electrical energy can be used to do useful work directly, while the heat is either wasted or used for other purposes.

A fuel cell "stack" requires fuel, oxidant and coolant in order to operate. The gases must be humidified, and the coolant temperature must be controlled. To achieve this, the fuel cell stack must be surrounded by a fuel system, fuel delivery system, air system, stack cooling system, and humidification system.

http://alternativefuels.about.com/od/hydrogen/a/whatshydrogen.htm

Natural Gas is an organic compound that is found deep within the earth. It is a fossil fuel formed over millions of years of geological pressures and changes. Natural gas is primarily methane comprised of hydrogen and carbon. It is a safe fuel source that is commonly used in homes and businesses for heating, lighting and cooking.

- Natural gas is compressed and enters the vehicle through the natural gas dispenser or fill post
- It flows into high-pressure cylinders that are located on the vehicle.
- When the driver steps on the accelerator, the natural gas leaves the on-board storage cylinder, passes through the high-pressure fuel line and enters the engine compartment.
- Gas then enters the regulator, which reduces pressure from up to 3,600 psi to approximately atmospheric pressure.
- The natural gas solenoid valve allows natural gas to pass from the regulator into the gas mixer or fuel injectors.

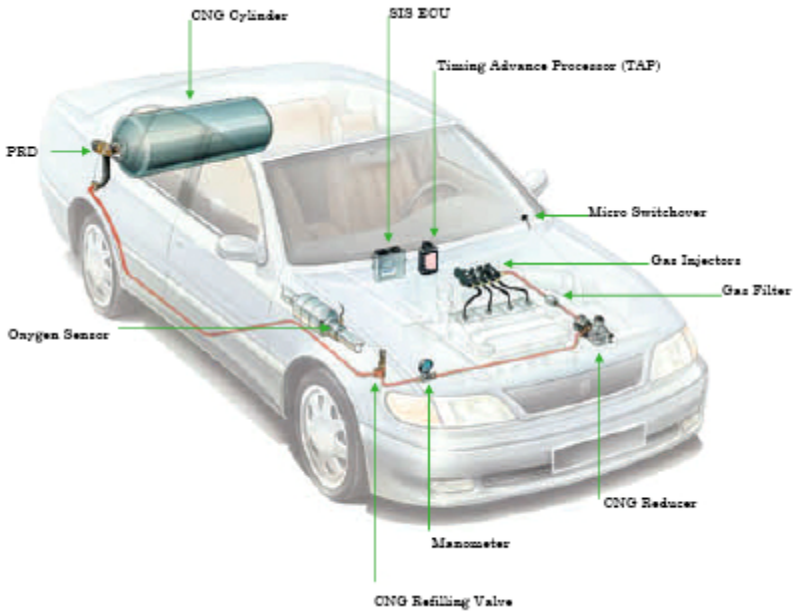

- Natural gas mixed with air flows down through the carburetor or fuel injection system and enters the engine's combustion chambers.

http://www.mckenziecorp.com/dehydration.htm